308-D

D-Panic Exit Device

Panic Exit Devices

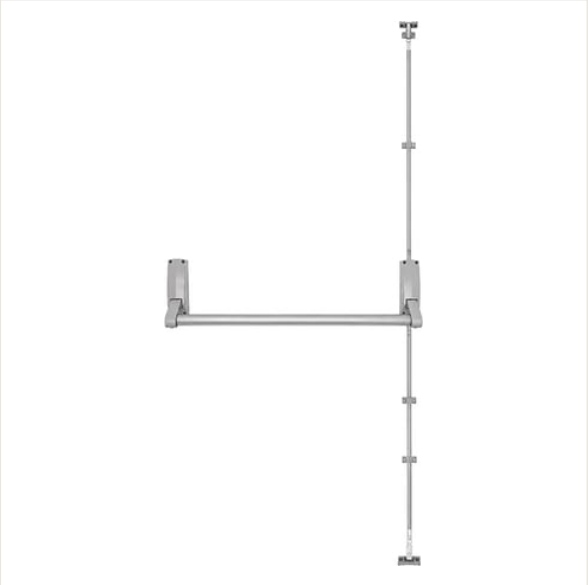

Specifications

Material	Aluminum alloy body, iron bar
Length	1025mm overall, 1000mm bar
Height	2400mm with top and bottom rods
Projection	93mm

Confirm on order

Not stated in our published data, so confirm on the order: finish codes, fixing-hole positions, order code per finish.